LB50563

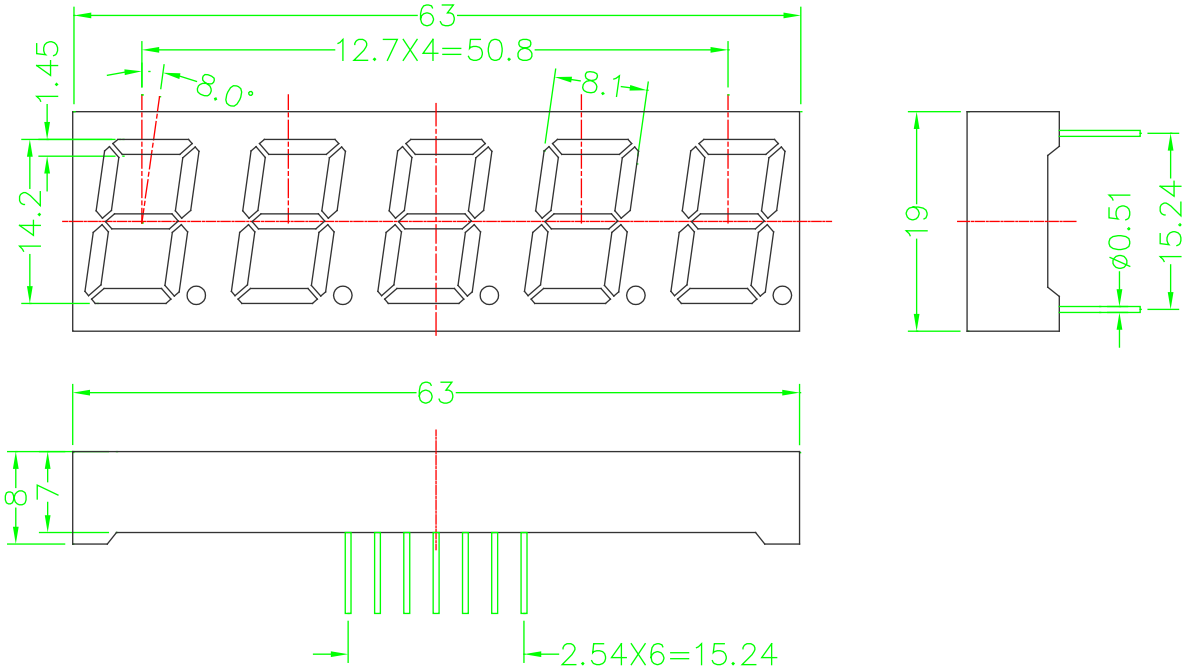

CODE I

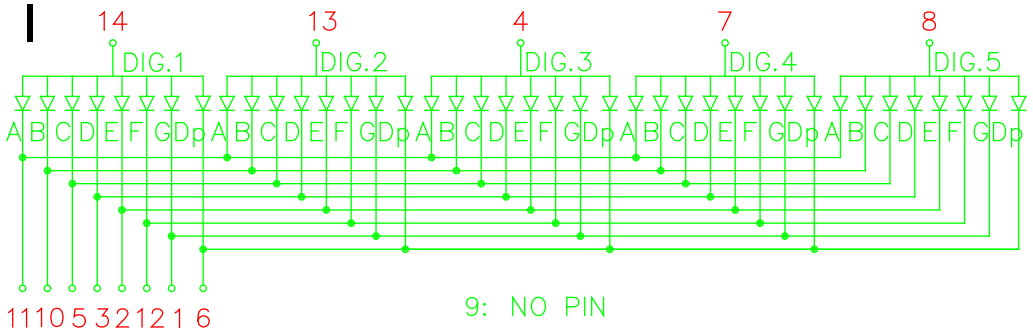
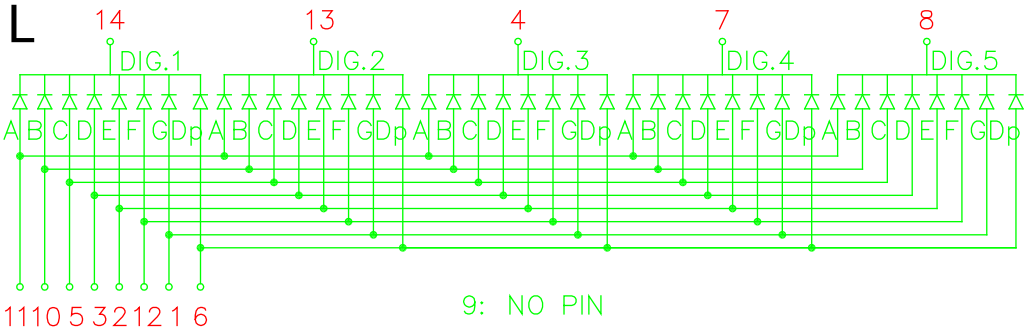
CODE L