LB20791AUR1B (LB20791A/D-DZ)

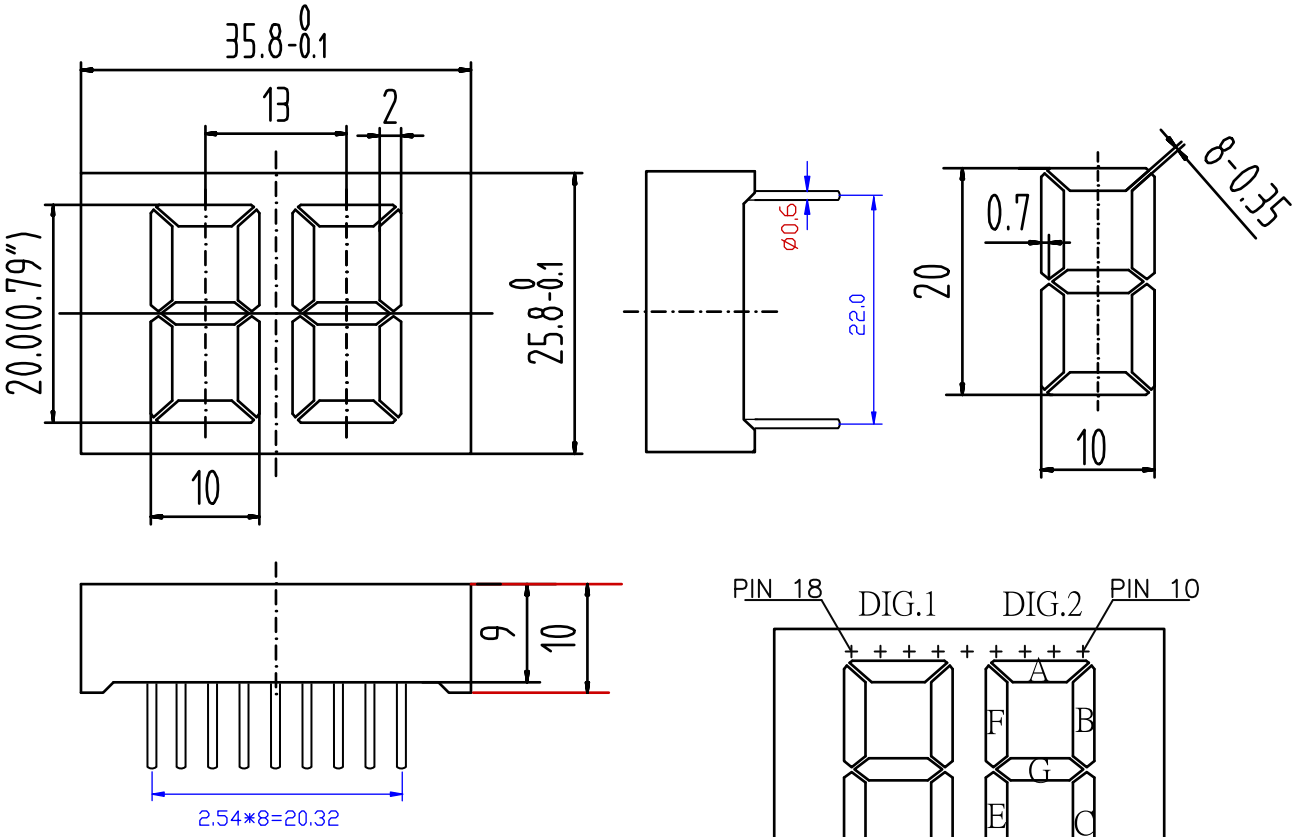

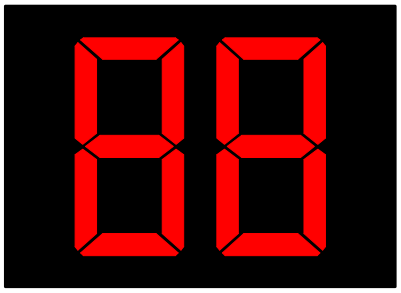

CODE A

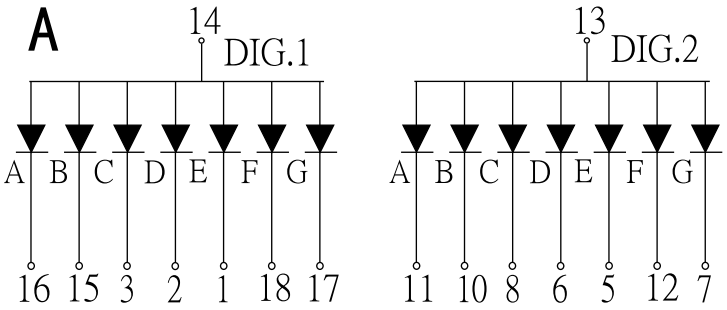

4, 9: NO CONNECT