PACKAGE DIMENSIONS INTERNAL CIRCUIT DIAGRAM

# LB40401DWH3B-D

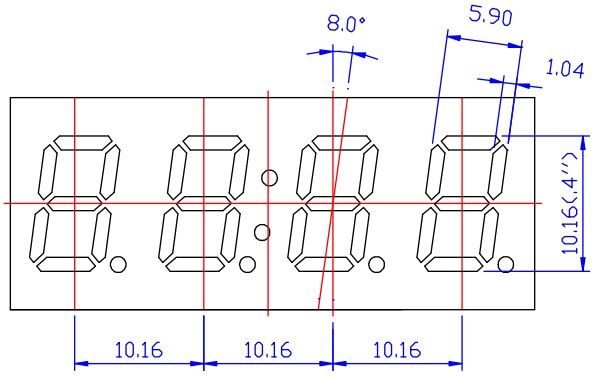


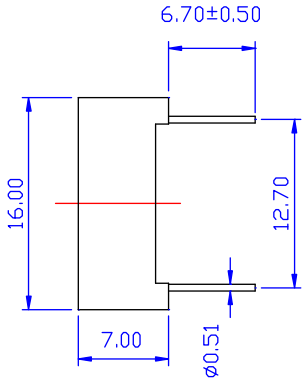


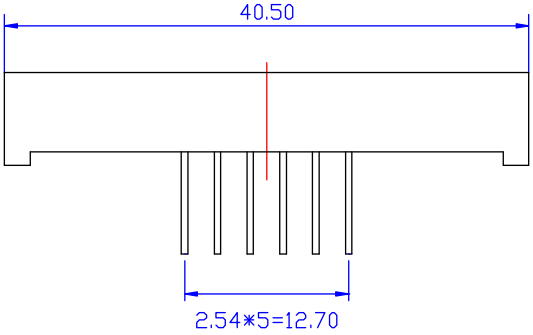


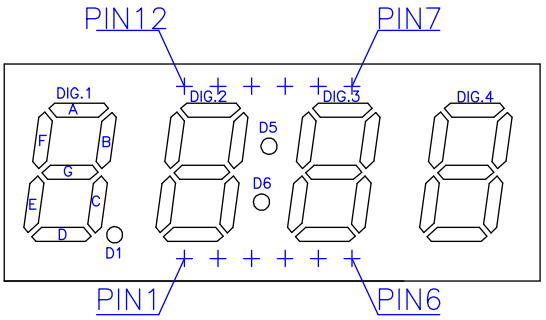


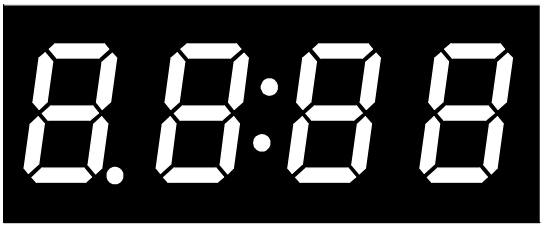
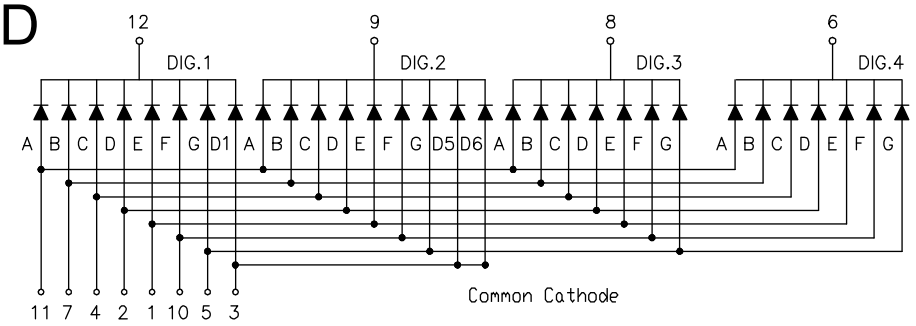
## CODE D