DATE	REV	DESCRIPTION	BY	CHKD
	A/1			

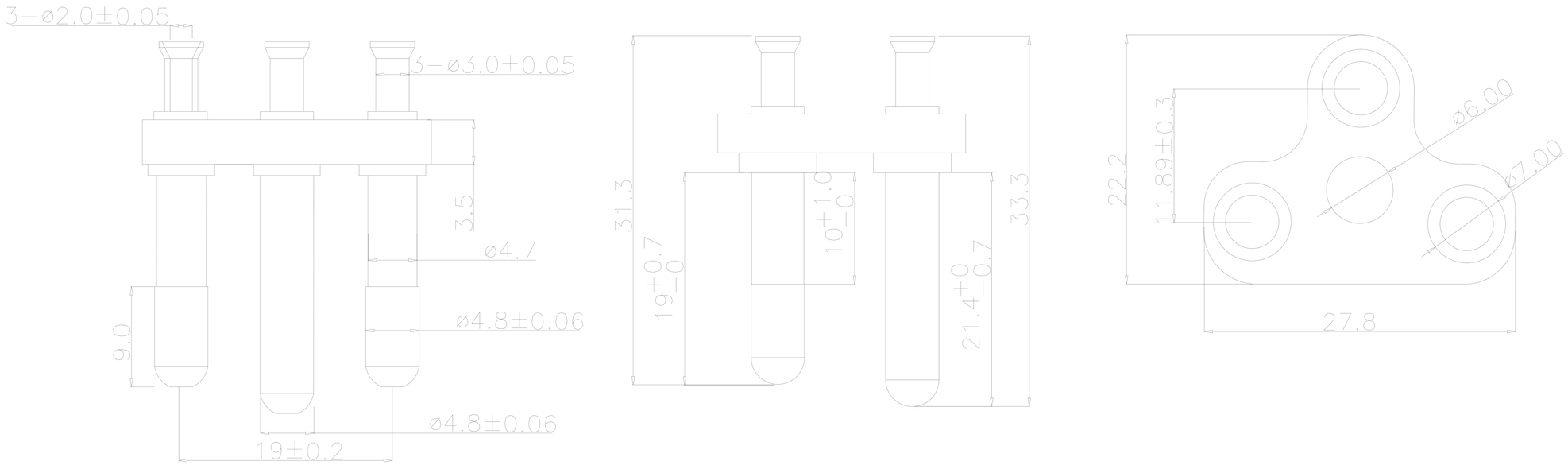

Unless specified on the drawing, tolerances are per the follows: ± 0.2

慈溪市跃隆五金塑料有限公司

CUSTOMER		FINISH	CHECKER	APPROVAL
SCALE	2:1	丁以建		
UNIT	MM	2010\11\17		

3RD

ITEM	泰国头三插	DRAW NO.	