DATE	REV	DESCRIPTION	BY	CHKD
	A/1			

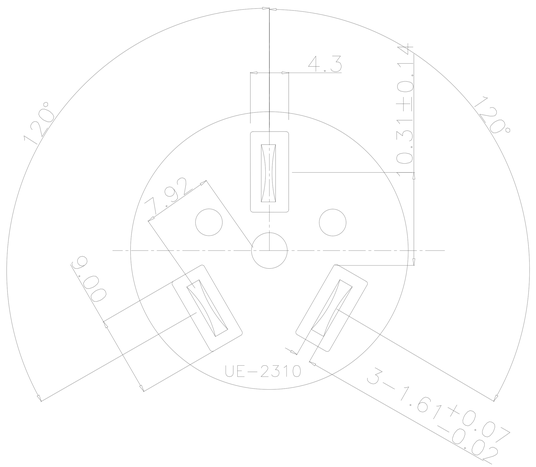

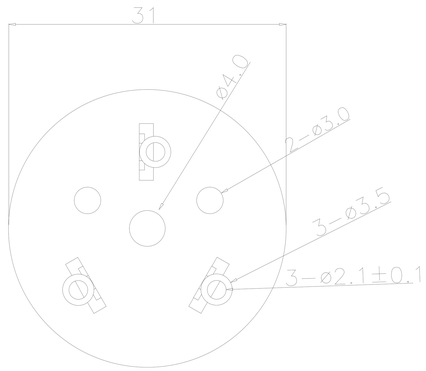

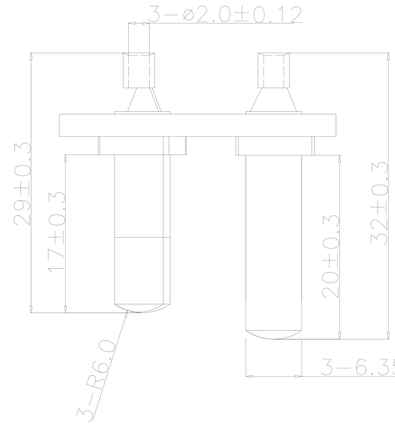

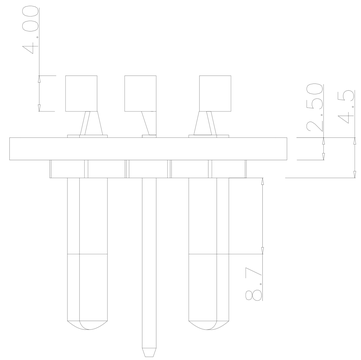

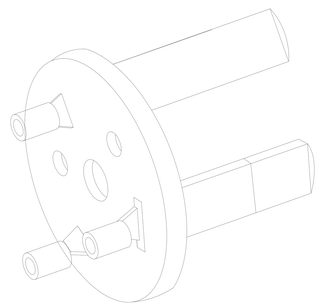

Unless specified on the drawing, tolerances are per the follows: ± 0.2

慈溪市跃隆五金塑料有限公司

CUSTOMER		FINISH	CHECKER	APPROVAL
SCALE		丁以建		
UNIT	MM	2017\05\20		

3RD

ITEM	澳标三插 UE-A	DRAW NO.	Xy-A-078