DATE	REV	DESCRIPTION	BY	CHKD

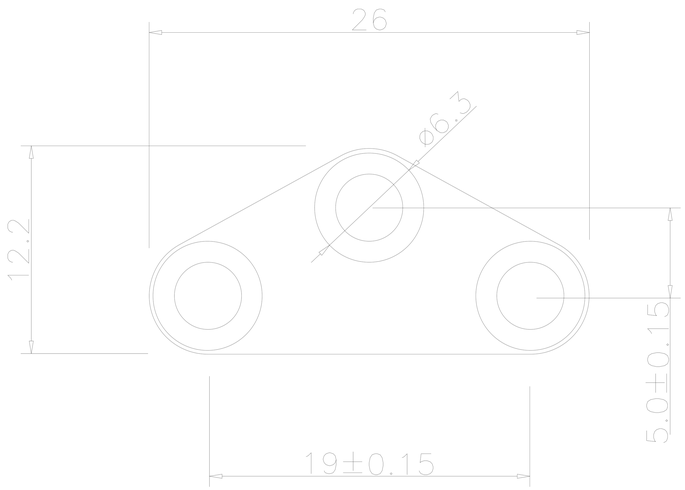

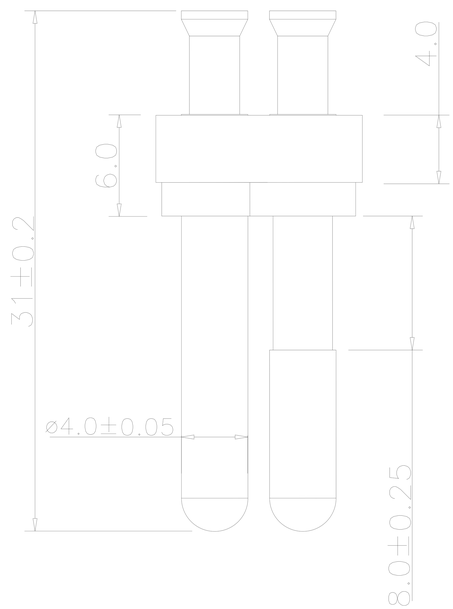

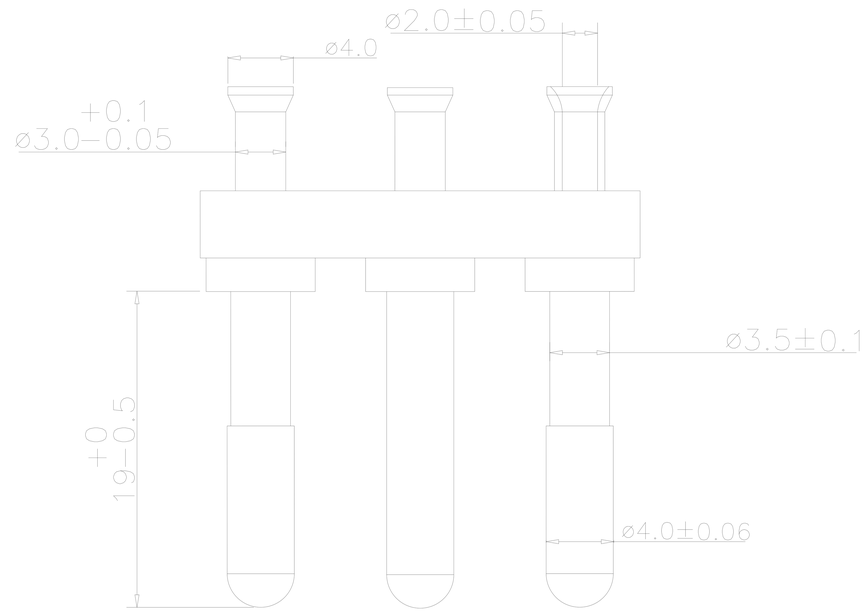

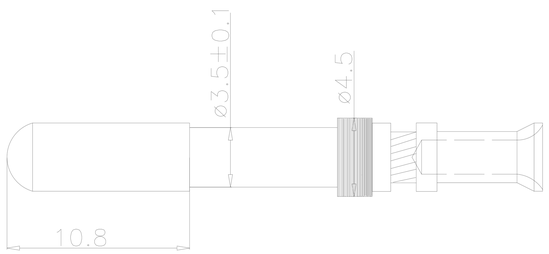

Unless specified on the drawing, tolerances are per the follows:

.	± 1
.X	± 0.5
.XX	± 0.2

慈溪市跃隆五金塑料有限公司

CUSTOMER		FINISH	CHECKER	APPROVAL
SCALE	2: 1	丁以建		
3RD	UNIT	MM	2016\05\12	
ITEM	三插瑞士头	DRAW NO.	A−006	