RCIM-15

15" Industrial LCD rack mount monitor

Features

- 19" Compact 15" rack mount display monitor with 7U height
- 15" XGA TFT LCD Panel support 1024×768 pixels
- 90°tilt adjustment while mounted in rack: +45 °~ -45°
- Input signal : VGA + DVI + AUDIO
- 250 cd/m2 brightness
- OSD control keys to optimize the display
- AC 100-240V wide range external ac adapter . Heavy duty steel chassis with strengthen glass (Touch option)
- Build in 2x2 watts stereo speaker . Meet standard VESA hole (100x100 mm), support desk top stand / wall mount/ swing arm mounting

Specifications

TFT characteristics	
Display Type	15" XGA TFT LCD
Resolution	1024 × 768
Max.color	16.2M
Luminance	250 cd/m2
View Angle	178°(H) , 160°(V)
Pixel Pitch	0.297 x 0.297 mm
Contrast Ratio	700 : 1
Response Time	8 ms
LCD MTBF	50,000hrs
Mechanical and Environmental	
Construction	Heavy duty steel and aluminum front panel
Dimensions (WxHxD)	482.6 x 310.3 x 48 mm
Weight	Net: 6.2kg , Gross:9.5kg
Operating temperature	0 °C to 50 °C
Storage temperature	-20 °C to 60 °C
Storage humidity	10% to 90% non-condensing
Anti-Vibration	17HZ-500 HZ 1G PTP
Anti-Shock	1G / peak(11m sec)
Certification and Approvals	CE/FCC/ROHS
Available Options	
Touch screen	Resistive Type with USB and RS232 controller
DC Power Input	Wide Range 8~30v DC input
Input Signals	
RGB Signal	D-SUB 15P Connector (female)
DC input	Aviation 2pin Plug
DVI-D Signal	DVI-D input 24pin connector (female)
Touch screen RS232 (option)	D-SUB 9p connector (female)
Touch screen USB (option)	USB-A type connector (female
Power Specifications	
Input	100~240VAC,50/60Hz
Output	DC12V@ 5A / 60W ,external ac adapter

Ordering information

VGA + DVI input	
RCIM-15	15" LCD Industrial Rack Mount Monitor with VGA + DVI + Audio input
RCIM-15TC	15" LCD Industrial Rack Mount Monitor with VGA + DVI + Audio input, with touch screen and RS232 controller
RCIM-15TU	15" LCD Industrial Rack Mount Monitor with VGA + DVI + Audio input, with touch screen and USB controller
Power Supply	
DC-DC Power	DC 8 ~ 30v input power module

Dimensions Diagram
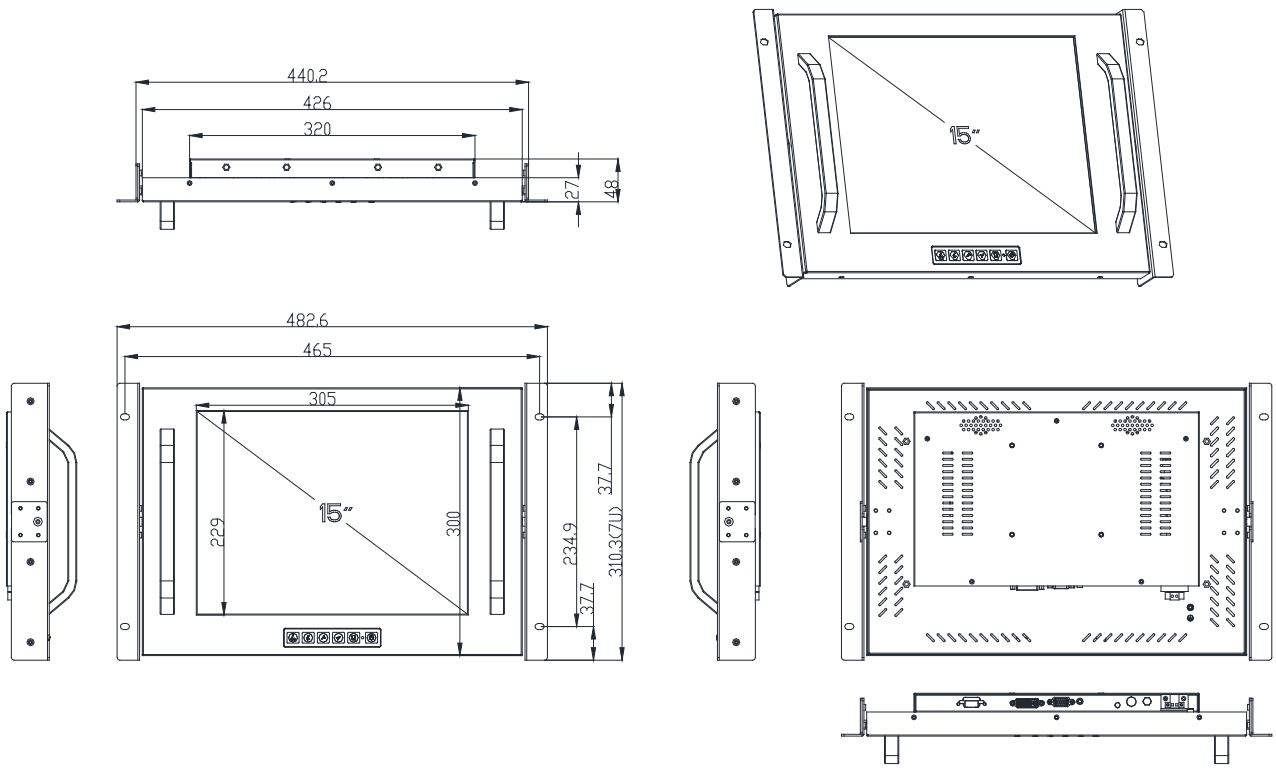
Unit: mm