RoHS Compliant

Electrical:
1.Voltage Rating:125 Vac Rms.
2.Current Rating:1.5 Amp.
3.Contact Resistance:40 Milliohms Max.
4.Insulation Resistance:1000 Megohms Min @500 Vdc.
5.Dielectric Strength:1000 Vac Rms 60Hz, 1Min.

Mechanical:
1.Operating:750 Cycles Min.

Environmental:
1.Storage:−40°C To +85°C.
2.Opertion:−20°C To +75°C.
Mates With Modular Plug Conforming
To FCC Part 68, Subpart F.

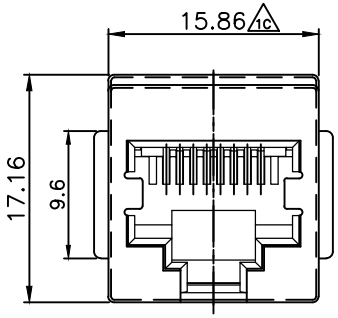

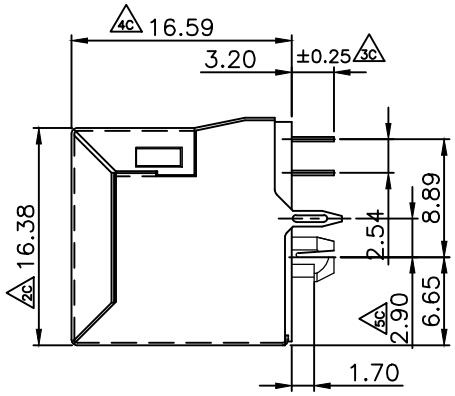

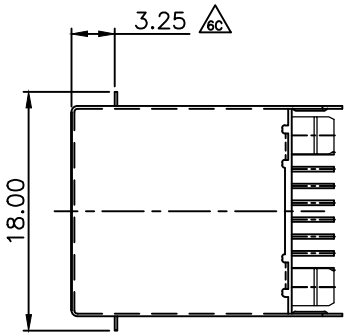

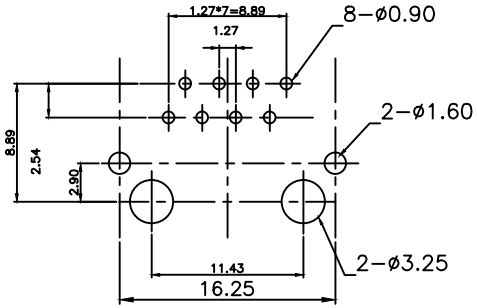

PCB LAYOUT/TOP VIEW

MATERIALS:
PLASTIC HOUSING: ENGINEERING THERMOPLASTIC
FLAMMABILITY RATING UL 94V−0.
CONTACTS: 0.35MM THICKNESS PHOSPHOR BRONZE
PLATING: GOLD PLATING OVER NICKEL IN CONTACT.
TIN PLATING OVER NICKEL IN SOLDER AREA.

SHIELDED: BRASS WITH NICKEL PLATED

6u" P/N J289010156
15u" P/N J289010157
30u" P/N J289010158
50u" P/N J289010159

REV	DESCRIPTION	DATE

J-CON

UNIT	SCALE	SHEET
mm	2.5/1	1 of 1

DRAWN BY: Alan 11'0921
APPROVED BY: Alan 11'0921

General Tolerance
.XXX ±0.10
.XX ±0.25
.X ±0.38
X ±0.50
ANG ±3°

TITLE : Top Entry PCB Jack

DRAW NO : J289010156

REV. A