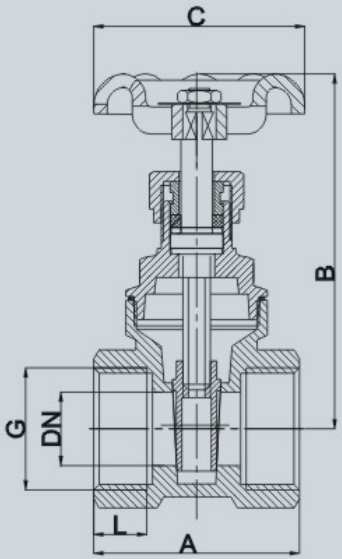

ART.NO	G	DN	A	B	C	L	Weight/g	BOX/Ctn
	1/2"	13	38	68	53	10	190	12/120
	3/4"	15	42	70	55	11.5	245	10/100
	1"	19	48	80	60	12.5	350	6/60
	1 1/4"	25	52	98	70	13.5	580	4/40
	1 1/2"	31	57	107	70	15	860	2/24
	2"	37	59	120	80	15.5	1150	2/16
	2 1/2"	52	75	178	100	20	2100	1/10
	3"	65	86	205	110	21	3050	1/6
	4"	89	95	245	125	23	5050	1/4