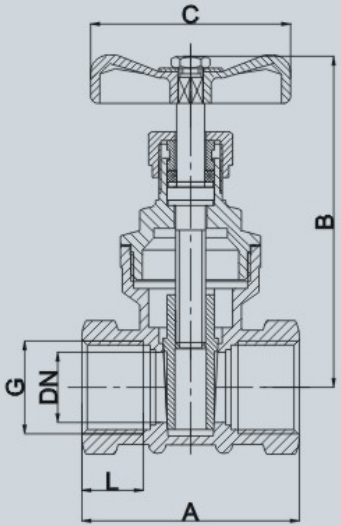

ART.NO	G	DN	A	B	C	L	Weight/g	BOX/Ctn
	1/2"	13	37	62	50	9.5	240	10/100
	3/4"	15	42	67	52	10	330	8/80
	1"	18	46	75	60	11	480	6/60
	1 1/4"	26	52	95	70	14	770	4/32
	1 1/2"	32	56	120	70	14	980	2/24
	2"	41	58	125	80	15.5	1470	2/16
	2 1/2"	59	68	161	100	20	2270	1/10
	3"	70	81	185	110	21	3250	1/6
	4"	84	88	222	125	23	5500	1/4