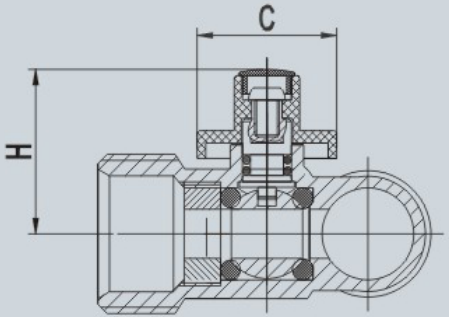

ART.NO	Size	G	G1	G2	A	B	C	H	L	Weight/g	Pcs/Ctn
	1/2"x1/2"x1/2"		1/2	1/2	62	40.5	23	28.5	12	150	100
	1/2"x1/2"x3/4"		3/4	1/2	62	41	23	28.5	12	155	100