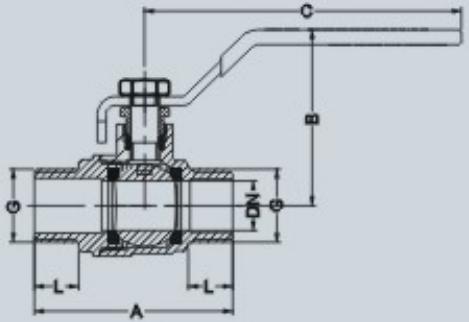

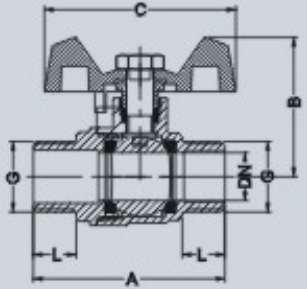

ART.NO	G	DN	A	B	C	L	Weight/g	Box/Ctn
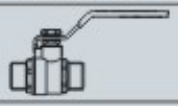	3/8"	11	56	49	89	12	180	12/120
	1/2"	14	56	49	89	12	175	12/120
	3/8"	11	56	41	56	12	155	16/160
	1/2"	14	56	41	56	12	150	16/160