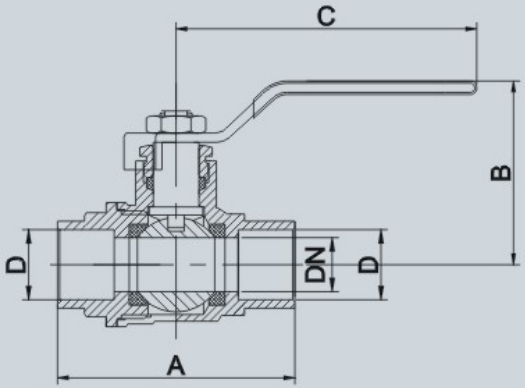

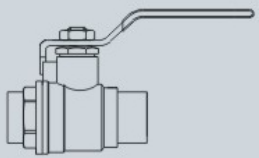

ART.NO	D	DN	A	B	C	Weight/g	Box/Ctn
	16mm	15	64	47	95	230	10/100
	22mm	19	72	52	95	289	8/80
	28mm	25	88	61	115	489	6/60
	35mm	32	107	68	115	750	4/40
	44mm	40	116	76	155	1100	4/32
	55mm	50	178	87	175	1650	2/32