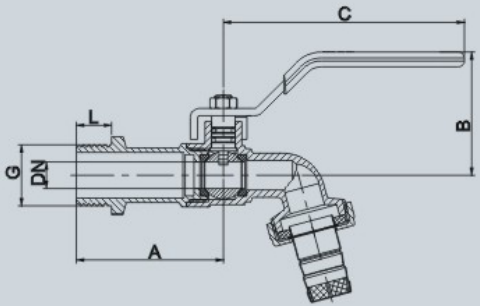

ART.NO	G	DN	A	B	C	L	Weight/g(brass)	Weight/g(zinc)	Box/Ctn
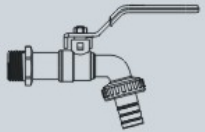	1/2"	9	50	41	82	11.5	160	130	12/120
	3/4"	10	56	43	82	12	210	190	10/100
	1"	15	63	46	90	14	350	260	6/60
	1/2"	9	50	41	52	11.5	142	112	12/120
	3/4"	10	56	43	52	12	190	170	10/100
	1"	15	63	46	62	14	320	230	6/60