CAT 5E & CAT 3 MODULAR PLUGS

MODULAR PLUGS RJB01-UC5E RJB01-SC5E RJR01-UC3

Photo

RJB01-UC5E

RJB01-SC5E

RJR01-UC3

Products Description

We offer modular plugs in standard configuration terminate modular cords for patching or Work area application , modular plugs can be terminated to the exact cable length in order to Maintain a nearer , more organized installment , the plugs terminate twist pair cable with 26-22 AWG solid all plugs contracts have 50 micron inches of gold plating over nickel.

Features and benefits

- Clear color
- Meet or exceed the requirement in the Cat 5e T568 A and T568 B (Telecommunication requirement)
- Contacts are nickel plated, phosphor bronze with 6 to 50u" gold plate
- Meets EIA/TIA 568 Cat 5E (Cat 3) specification
- Contact blade : phosphor bronze
- Exclusive stagger conductors guide design reduces near end cross talk

Presentation

RJB01-UC5E Presentation

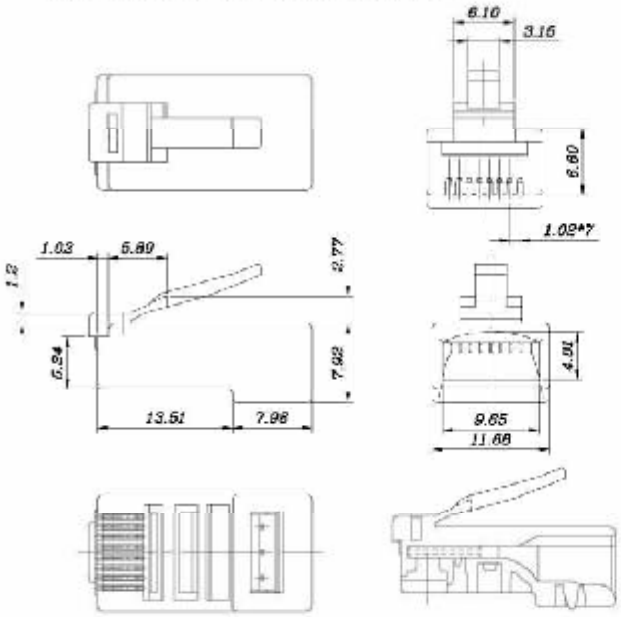

RJB01-SC5E Presentation

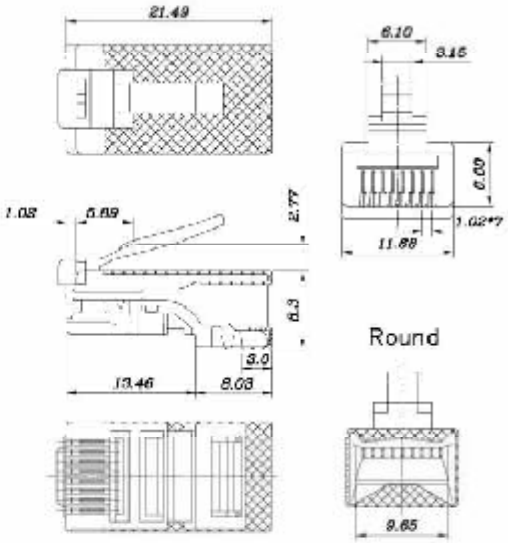

Order Information

Part number	Description	Inner box	Carton	Carton measurement	Carton weight
RJB01-UC5E	Cat 5E UTP Modular plugs	500PCS	5000PCS	L 53.5cm × W 31.3cm × H 23.4cm	9KG
RJB01-SC5E	Cat 5E FTP Modular plugs	500PCS	5000PCS	L 53.5cm × W 31.3cm × H 23.4cm	10KG
RJR01-UC3	Cat 3 UTP Modular plugs	100PCS	2000PCS	L 53.5cm × W 31.3cm × H 23.4cm	6.8KG

PDF created with pdfFactory trial version www.pdffactory.com